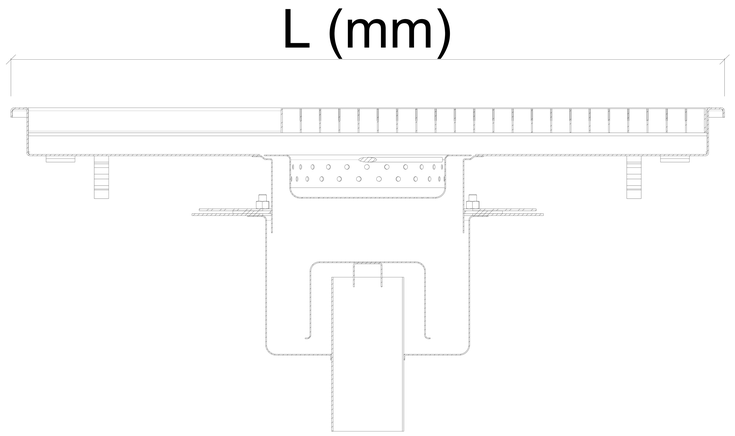

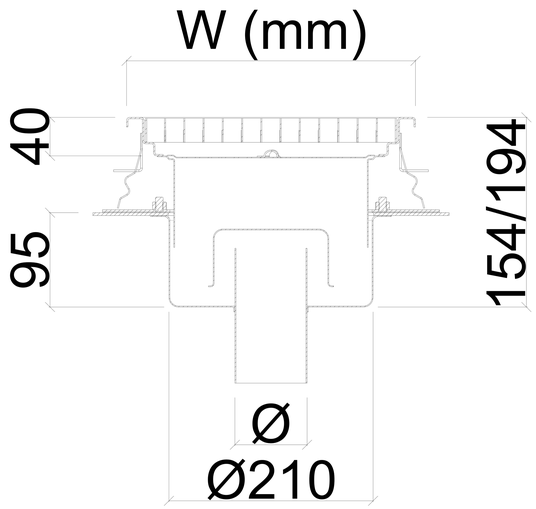

LOW TYPE

MODEL	W x L	Ø		
		DN50	DN70	DN100
DAG-35	300 x 480	Ø50	Ø75	Ø110
DAG-37	300 x 741			
DAG-39	300 x 921			
Max. Flow Rate	lt / min	50	50	70
Waterseal Height		50mm		

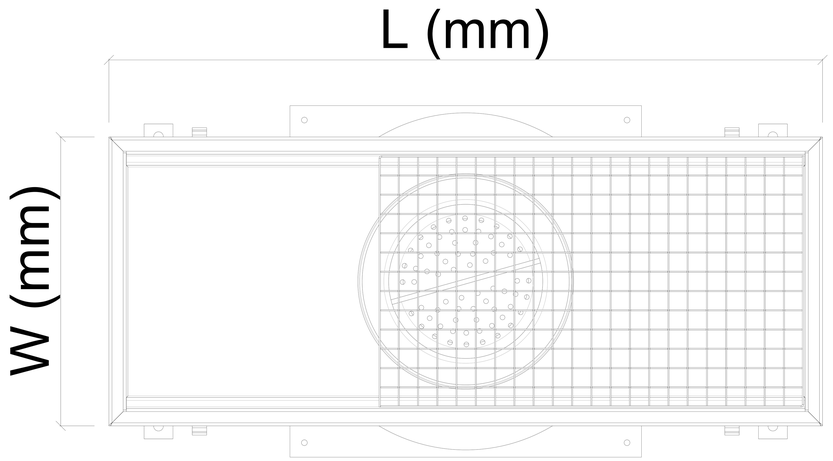

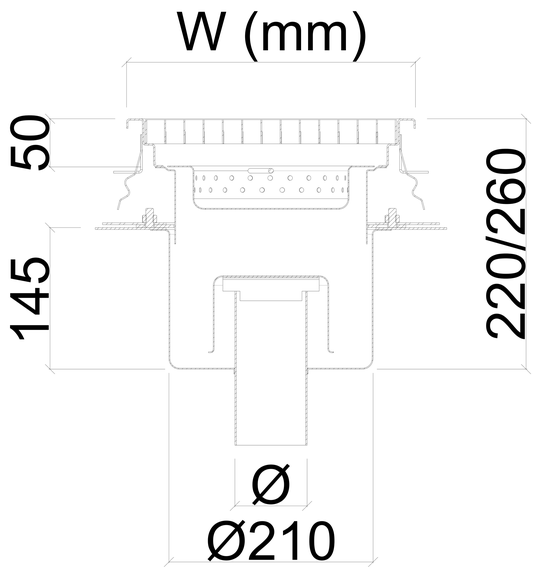

DEEP TYPE

MODEL	W x L	Ø		
		DN50	DN70	DN100
DAG-35-D	300 x 480	Ø50	Ø75	Ø110
DAG-37-D	300 x 741			
DAG-39-D	300 x 921			
Max. Flow Rate	lt / min	50	50	70
Waterseal Height		60mm		

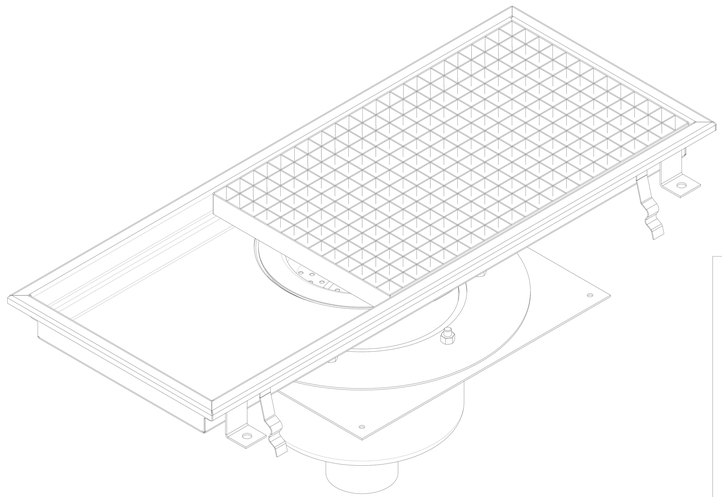

APPLICATION DRAWING

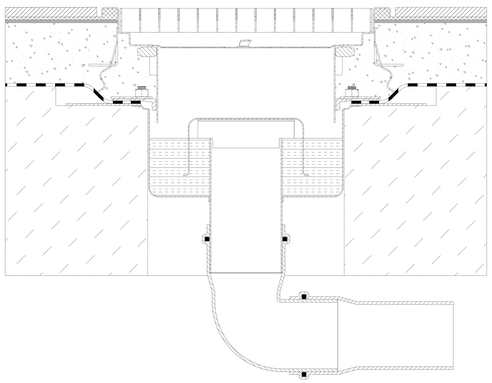

OPTIONAL

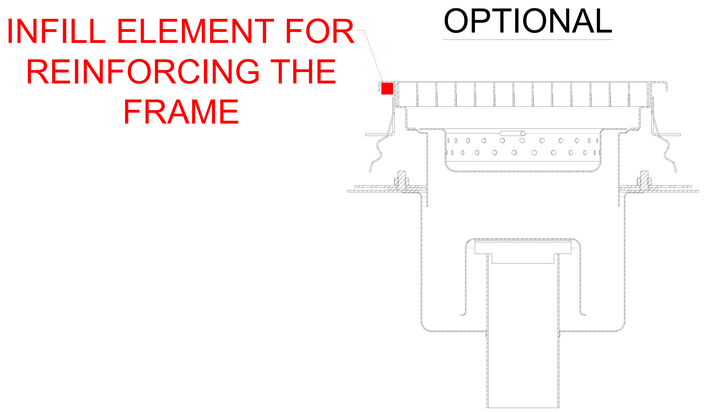

FENICROM®