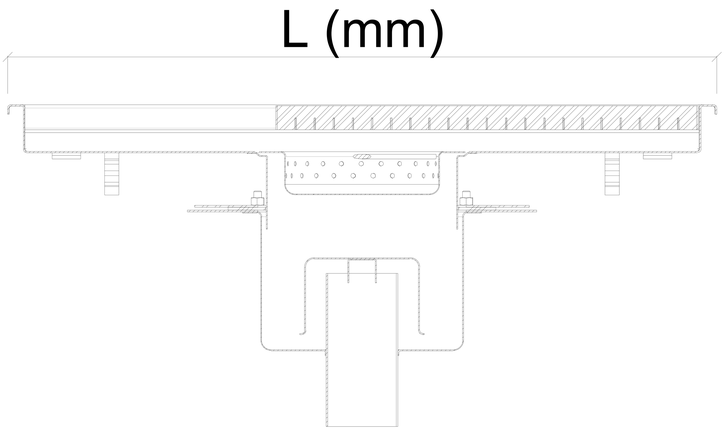

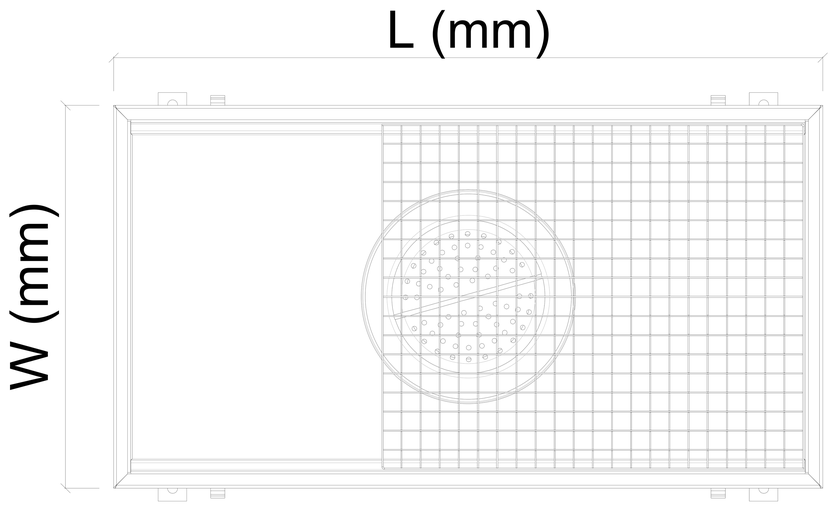

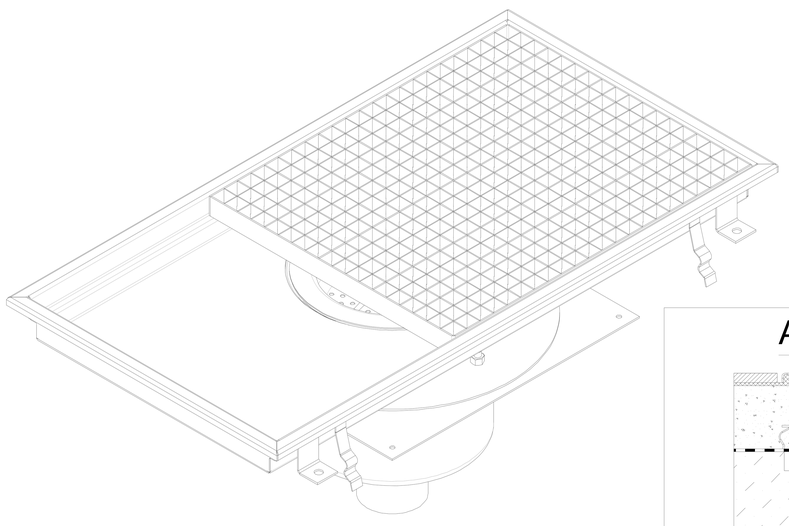

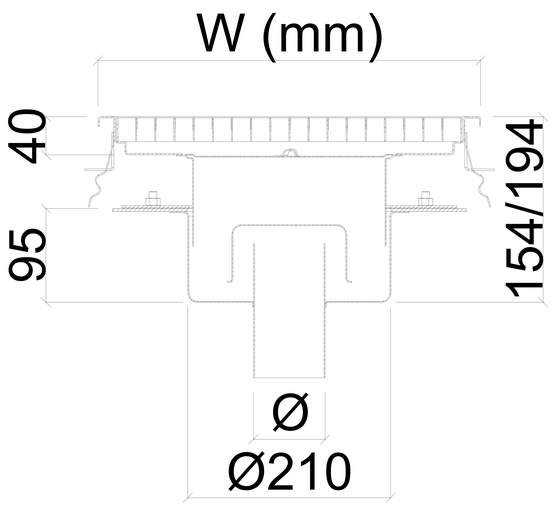

LOW TYPE

MODEL	W x L	Ø		
		DN50	DN70	DN100
DAG-45	400 x 480	Ø50	Ø75	Ø110
DAG-47	400 x 741			
DAG-49	400 x 921			
Max. Flow Rate	lt / min	50	50	70
Waterseal Height		50mm		

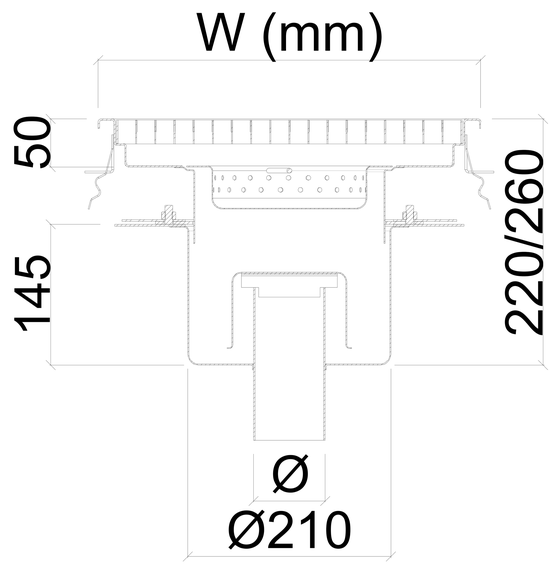

DEEP TYPE

MODEL	W x L	Ø		
		DN50	DN70	DN100
DAG-45-D	400 x 480	Ø50	Ø75	Ø110
DAG-47-D	400 x 741			
DAG-49-D	400 x 921			
Max. Flow Rate	lt / min	50	50	70
Waterseal Height		60mm		

APPLICATION DRAWING

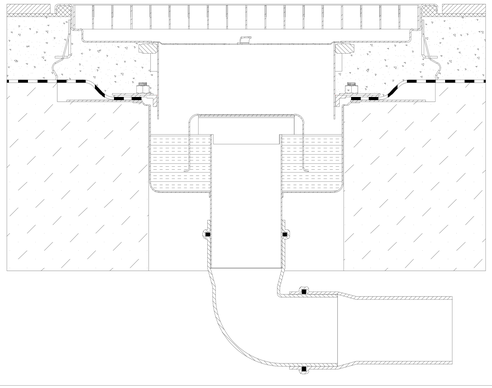

OPTIONAL

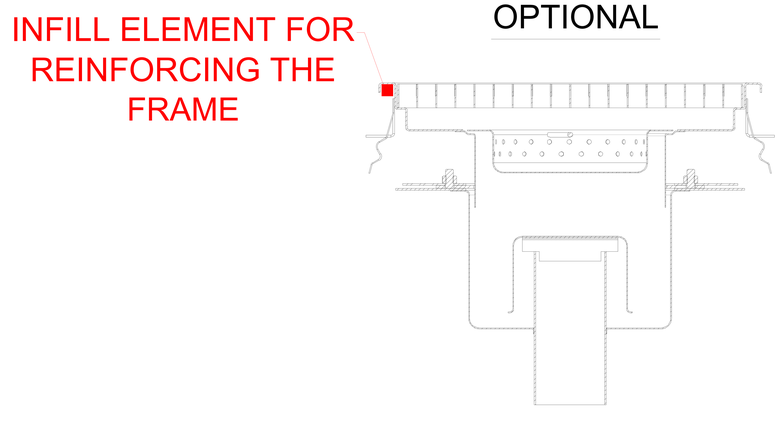

FENICROM®