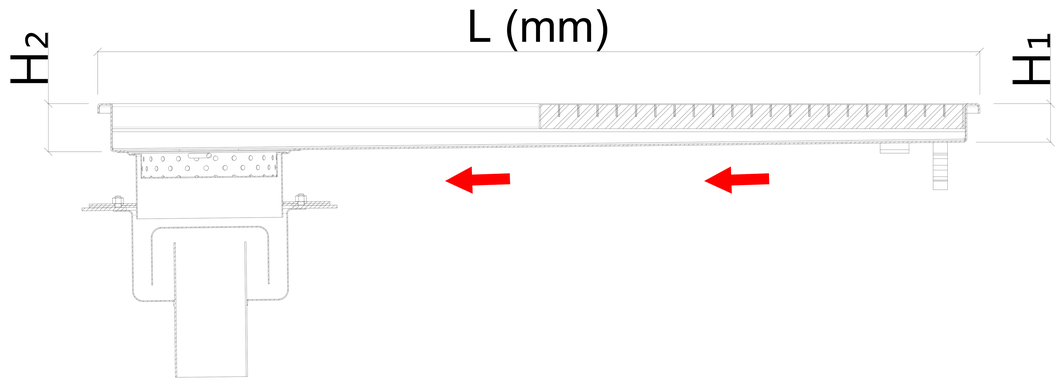

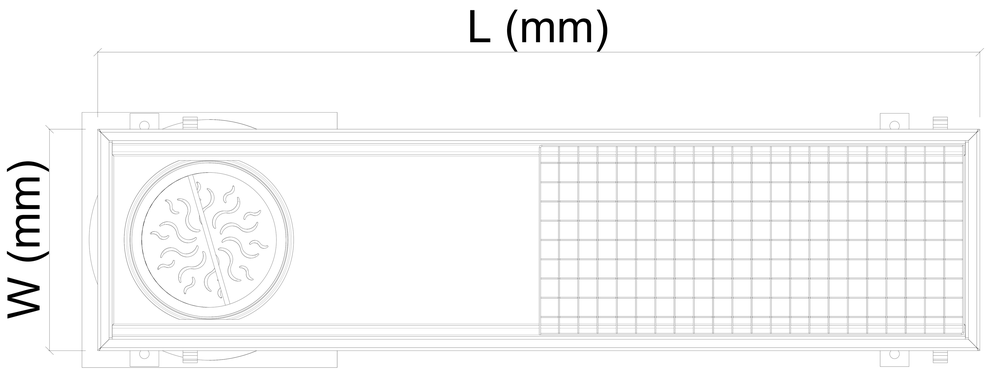

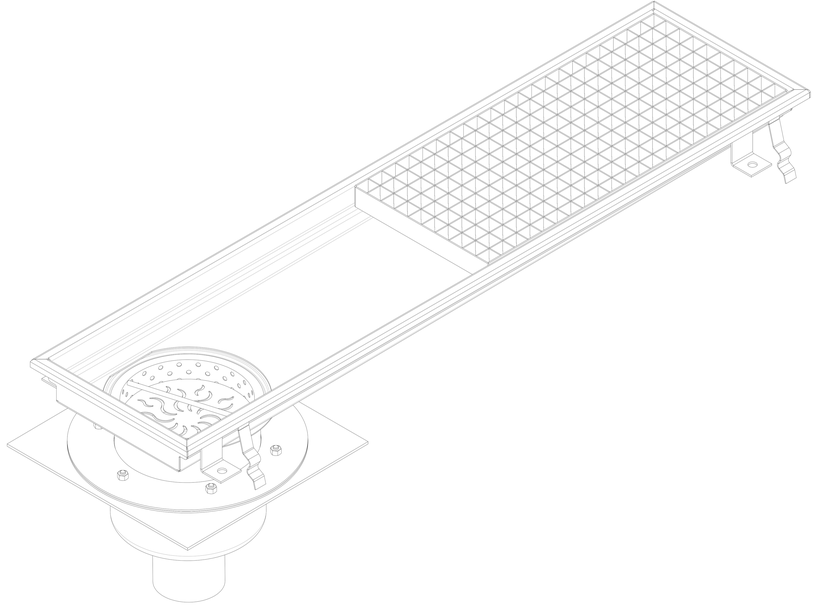

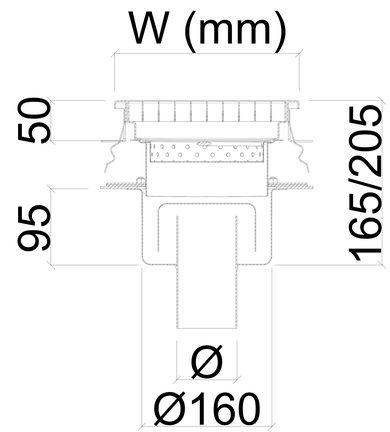

LOW TYPE				
MODEL	W x L	H1-H2	Ø	
			DN50	DN70
DKAG-29	230 x 916	40-50	Ø50	Ø75
DKAG-211	230 x 1176			
DKAG-213	230 x 1356			
DKAG-216	230 x 1618			
DKAG-218	230 x 1798			
DKAG-220	230 x 2061			
DKAG-222	230 x 2241			
DKAG-225	230 x 2502			
Max. Flow Rate		It / min	50	50
Waterseal Height			50mm	

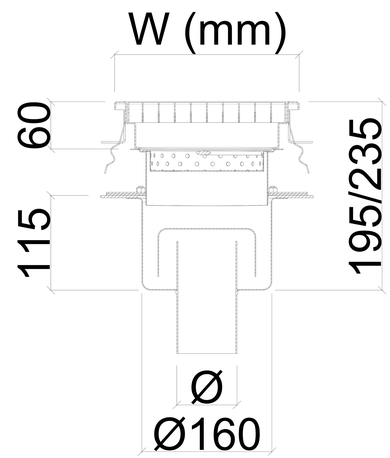

DEEP TYPE				
MODEL	W x L	H1-H2	Ø	
			DN50	DN70
DKAG-29-D	300 x 916	50-60	Ø50	Ø75
DKAG-211-D	300 x 1176			
DKAG-213-D	300 x 1356			
DKAG-216-D	300 x 1618			
DKAG-218-D	300 x 1798			
DKAG-220-D	300 x 2061			
DKAG-222-D	300 x 2241			
DKAG-225-D	300 x 2502			
Max. Flow Rate		It / min	50	50
Waterseal Height			60mm	

APPLICATION DRAWING

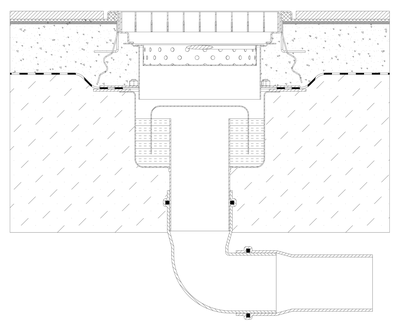

INFILL ELEMENT FOR REINFORCING THE FRAME

OPTIONAL

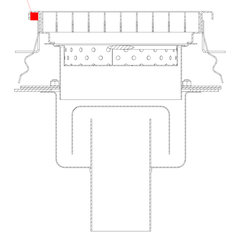

FENICROM®