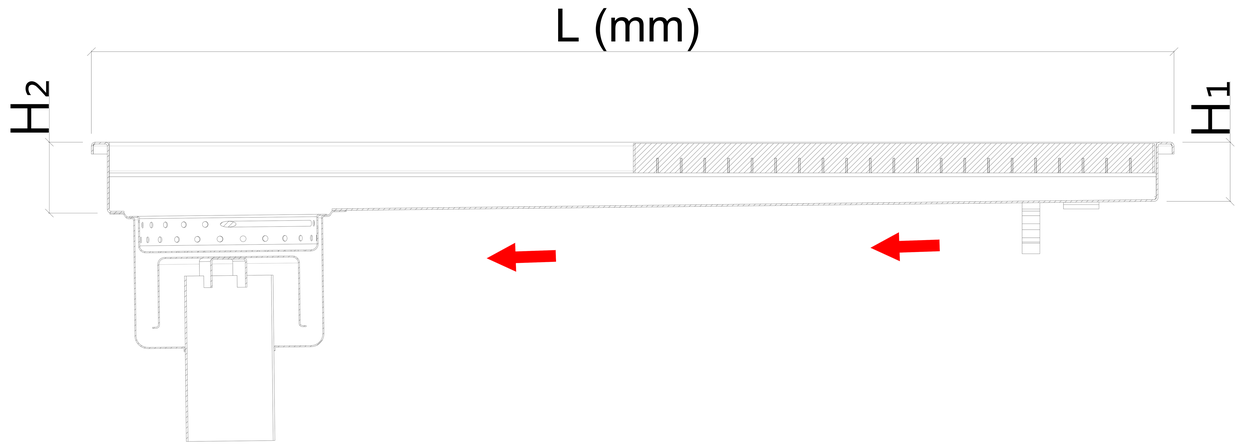


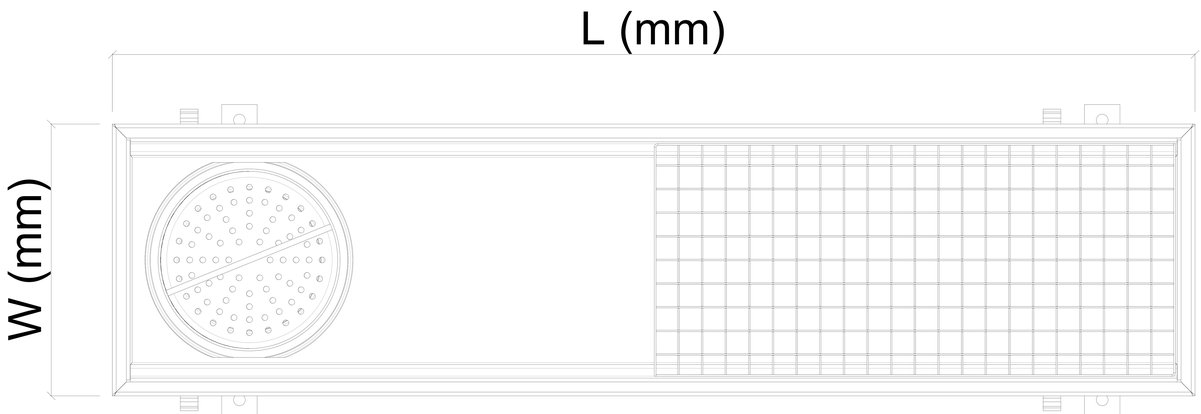


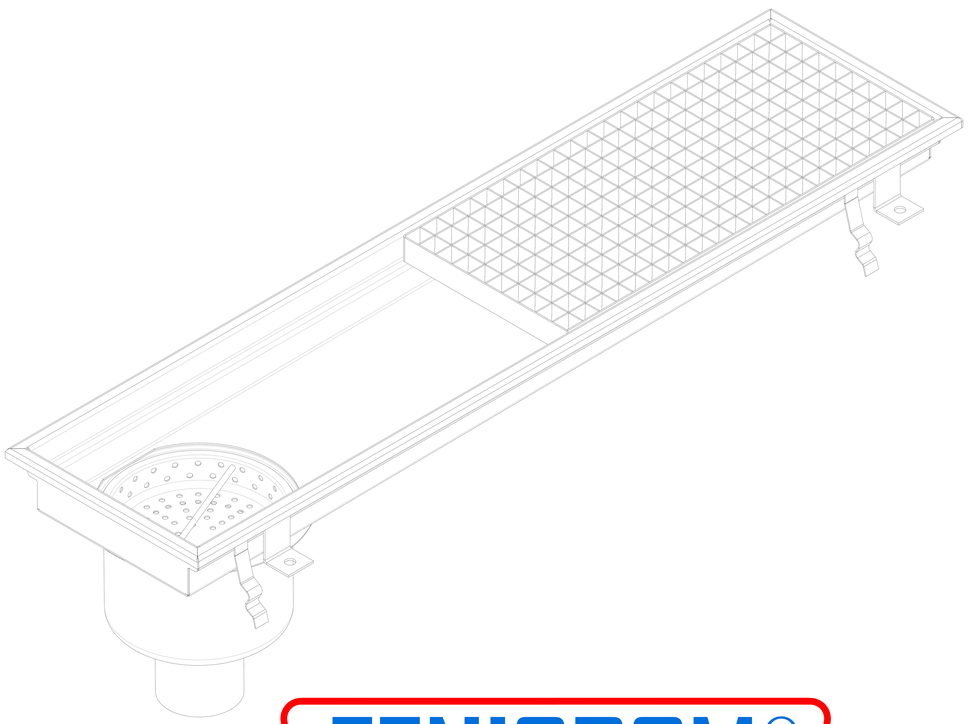

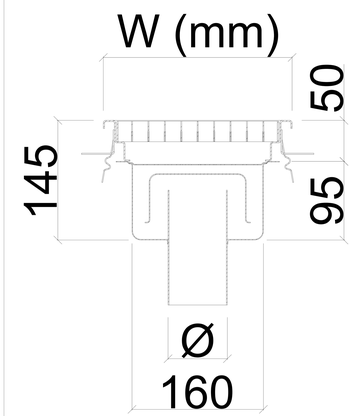


| LOW TYPE | | | | |
|---|---|---|---|---|
| MODEL | W x L | H1-H2 | Ø | |
| | | | DN50 | DN70 |
| KAG-29 | 230 x 916 | 40-50 | Ø50 | Ø75 |
| KAG-211 | 230 x 1176 | | | |
| KAG-213 | 230 x 1356 | | | |
| KAG-216 | 230 x 1618 | | | |
| KAG-217 | 230 x 1798 | | | |
| KAG-220 | 230 x 2061 | | | |
| KAG-222 | 230 x 2241 | | | |
| KAG-225 | 230 x 2502 | | | |
| Max. Flow Rate lt / min | | | 50 | 50 |
| Waterseal Height | | | 50mm | |

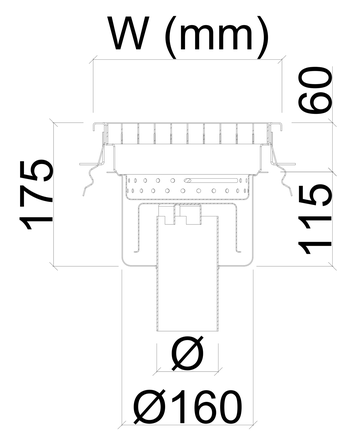


| DEEP TYPE | | | | |
|---|---|---|---|---|
| MODEL | W x L | H1-H2 | Ø | |
| | | | DN50 | DN70 |
| KAG-29-D | 230 x 916 | 50-60 | Ø50 | Ø75 |
| KAG-211-D | 230 x 1176 | | | |
| KAG-213-D | 230 x 1356 | | | |
| KAG-216-D | 230 x 1618 | | | |
| KAG-217-D | 230 x 1798 | | | |
| KAG-220-D | 230 x 2061 | | | |
| KAG-222-D | 230 x 2241 | | | |
| KAG-225-D | 230 x 2502 | | | |
| Max. Flow Rate lt / min | | | 50 | 50 |
| Waterseal Height | | | 50mm | |

APPLICATION DRAWING

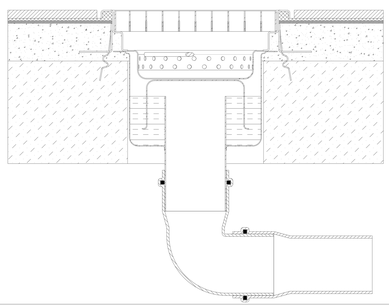

OPTIONAL

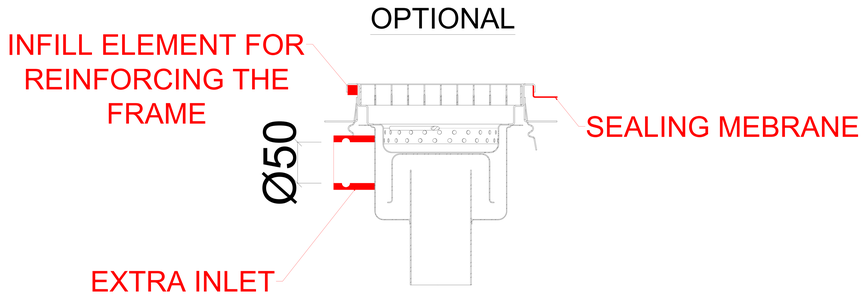


FENICROM®