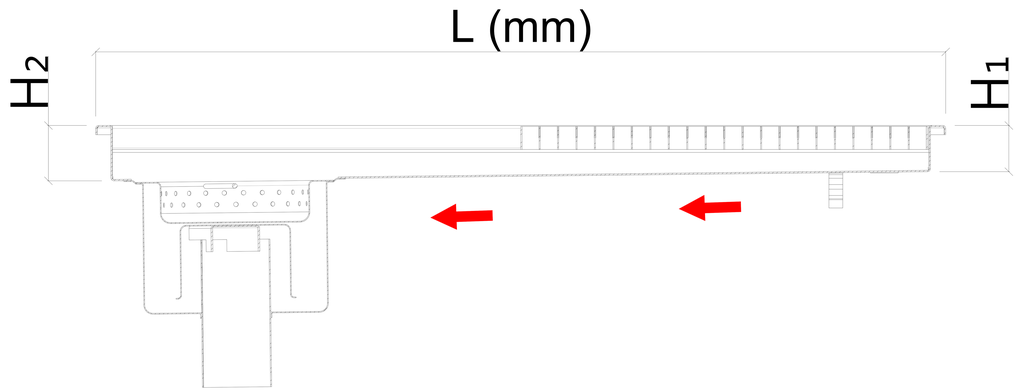

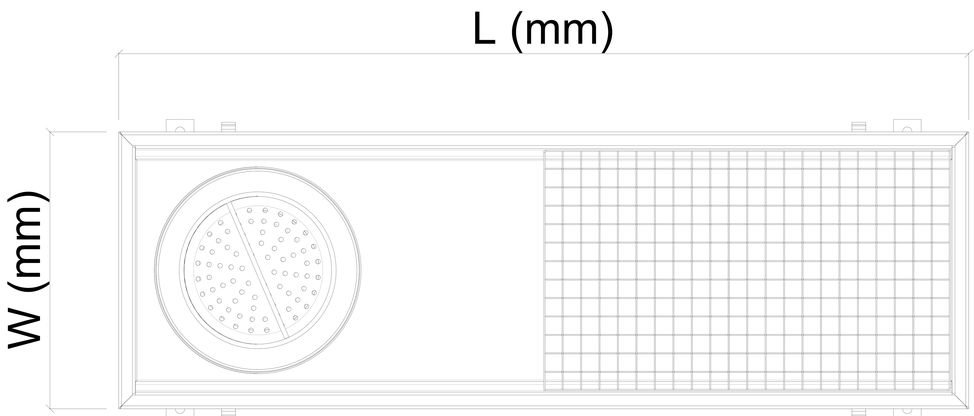

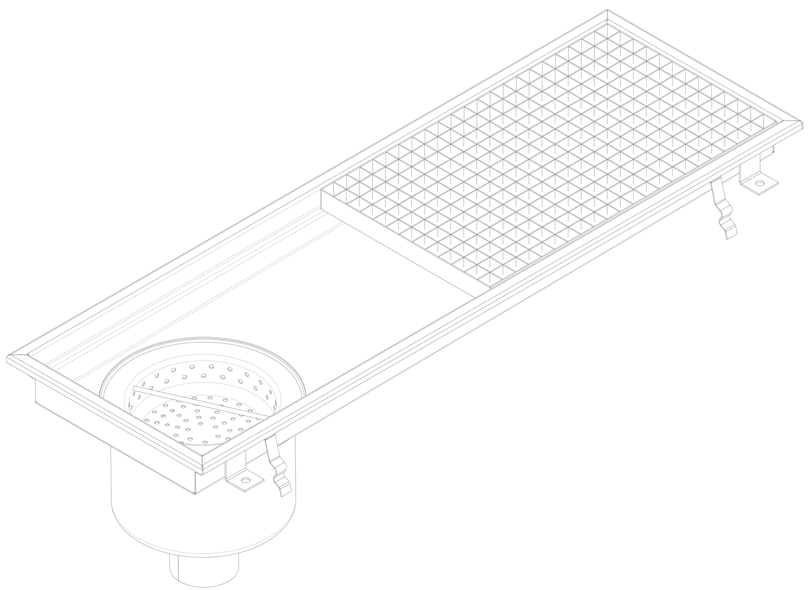

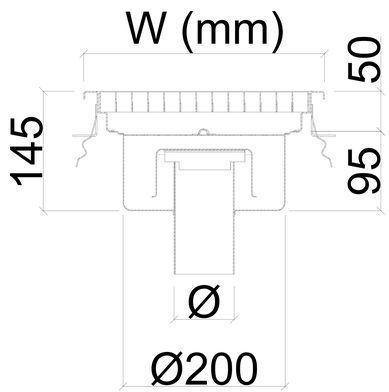

LOW TYPE

MODEL	W x L	H_1-H_2	Ø		
			DN50	DN70	DN100
KAG-39	300 x 921	40-50	Ø50	Ø75	Ø110
KAG-311	300 x 1183				
KAG-313	300 x 1364				
KAG-316	300 x 1625				
KAG-318	300 x 1805				
KAG-320	300 x 2068				
KAG-322	300 x 2248				
KAG-325	300 x 2510				
Max. Flow Rate		lt / min	50	50	70
Waterseal Height			50mm		

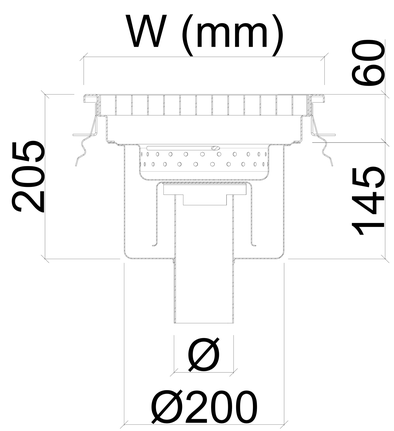

DEEP TYPE

MODEL	W x L	H_1-H_2	Ø		
			DN50	DN70	DN100
KAG-39-D	300 x 921	50-60	Ø50	Ø75	Ø110
KAG-311-D	300 x 1183				
KAG-313-D	300 x 1364				
KAG-316-D	300 x 1625				
KAG-318-D	300 x 1805				
KAG-320-D	300 x 2068				
KAG-322-D	300 x 2248				
KAG-325-D	300 x 2510				
Max. Flow Rate		lt / min	50	50	70
Waterseal Height			60mm		

APPLICATION DRAWING

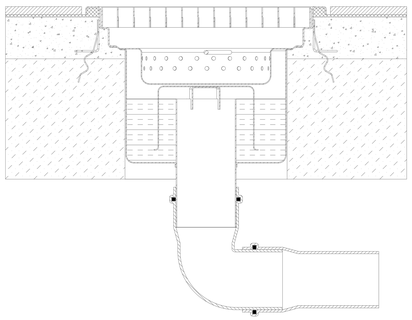

OPTIONAL

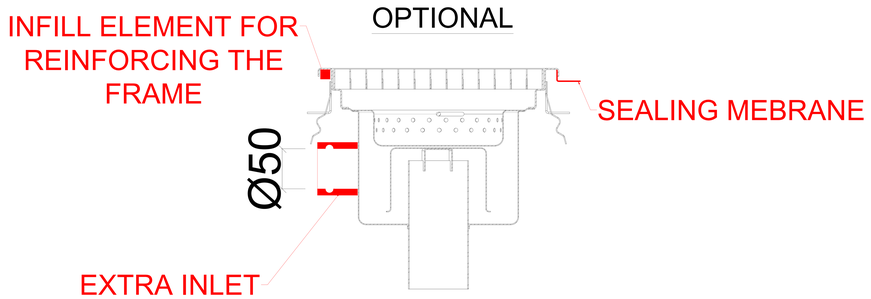

FENICROM®