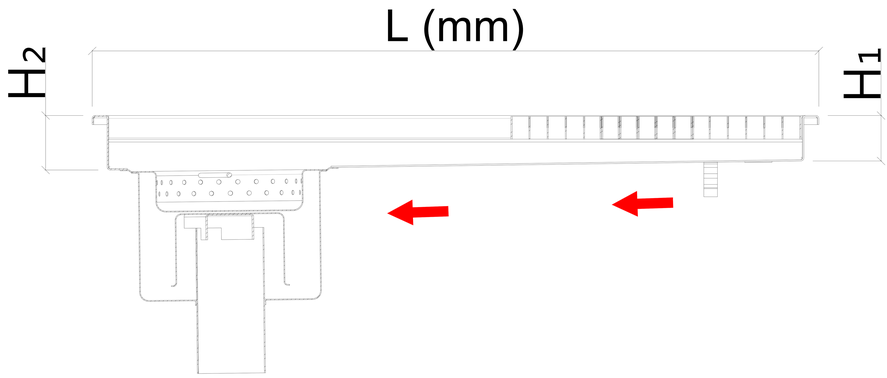

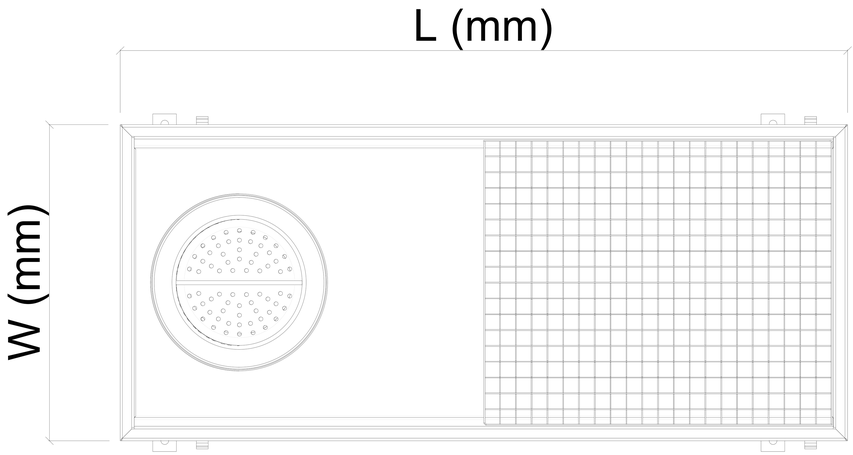

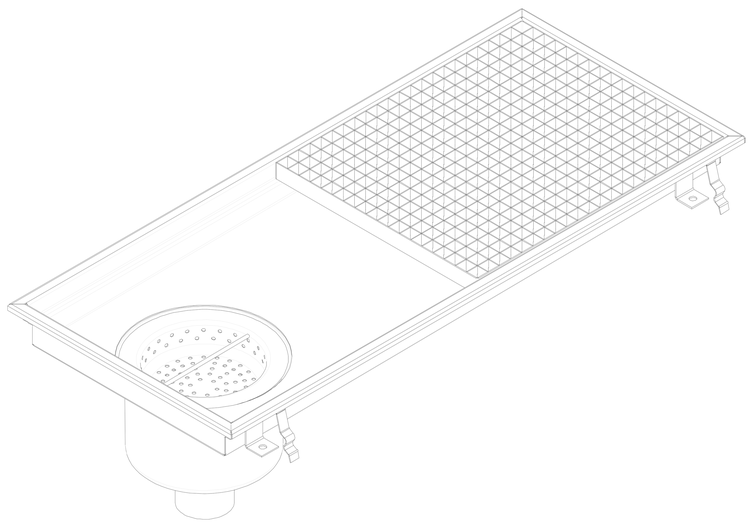

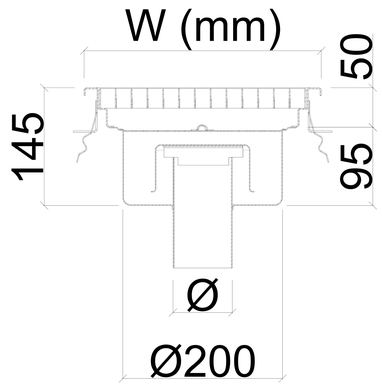

LOW TYPE

MODEL	W x L	H_1-H_2	Ø		
			DN50	DN70	DN100
KAG-49	400 x 921	40-50	Ø50	Ø75	Ø110
KAG-411	400 x 1183				
KAG-413	400 x 1364				
KAG-416	400 x 1625				
KAG-418	400 x 1805				
KAG-420	400 x 2068				
KAG-422	400 x 2248				
KAG-425	400 x 2510				
Max. Flow Rate lt / min			50	50	70
Waterseal Height			50mm		

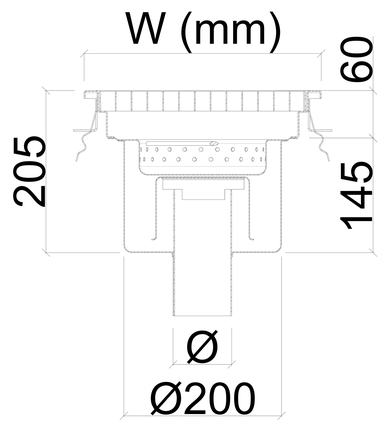

DEEP TYPE

MODEL	W x L	H_1-H_2	Ø		
			DN50	DN70	DN100
KAG-49-D	400 x 921	50-60	Ø50	Ø75	Ø110
KAG-411-D	400 x 1183				
KAG-413-D	400 x 1364				
KAG-416-D	400 x 1625				
KAG-418-D	400 x 1805				
KAG-420-D	400 x 2068				
KAG-422-D	400 x 2248				
KAG-425-D	400 x 2510				
Max. Flow Rate lt / min			50	50	70
Waterseal Height			60mm		

APPLICATION DRAWING

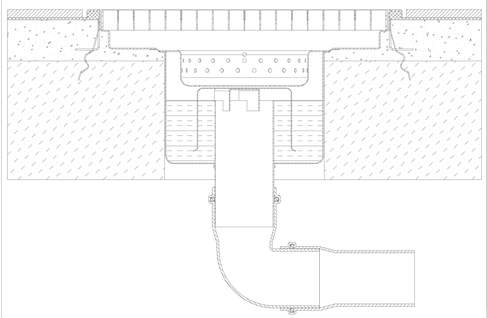

OPTIONAL

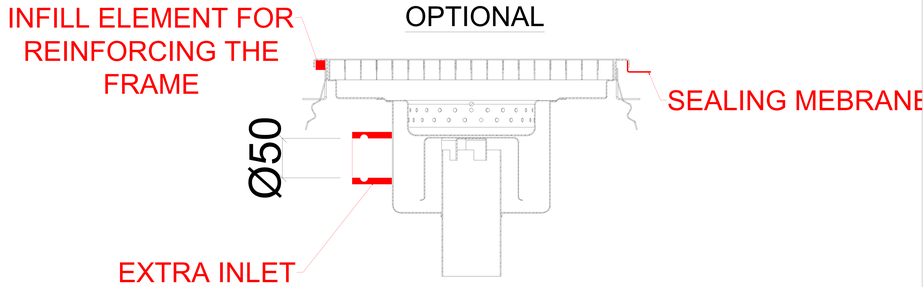

FENICROM®