| DEEP TYPE | | | |
|---|---|---|---|
| MODEL | W x L | Ø | |
| | | DN50 | DN70 |
| LTAG-D-22 | 250 x 250 | Ø50 | Ø75 |
| Max. Flow Rate lt / min | | 50 | 50 |
| Waterseal Height | | 50mm | |

| DEEP TYPE | | | | |
|---|---|---|---|---|
| MODEL | W x L | Ø | | |
| | | DN50 | DN70 | DN100 |
| LTAG-D-33 | 300 x 300 | Ø50 | Ø75 | Ø110 |
| Max. Flow Rate lt / min | | 50 | 50 | 70 |
| Waterseal Height | | 60mm | | |

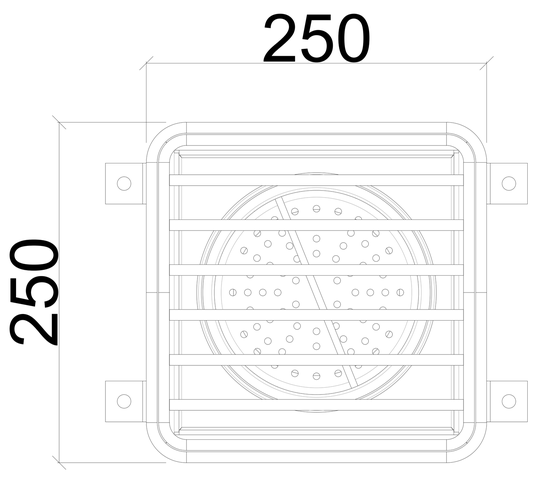


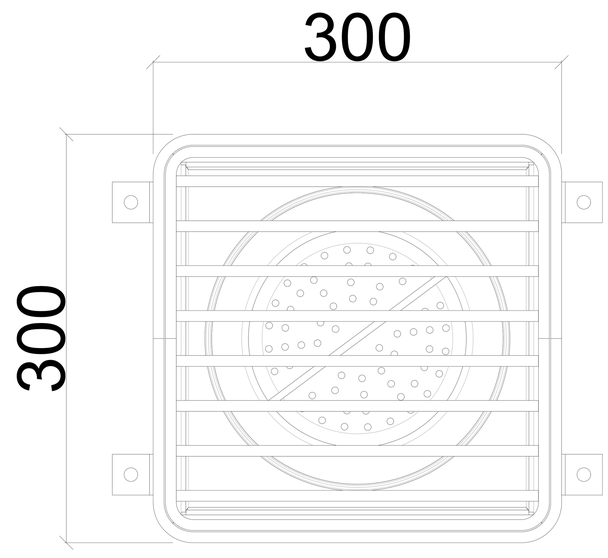


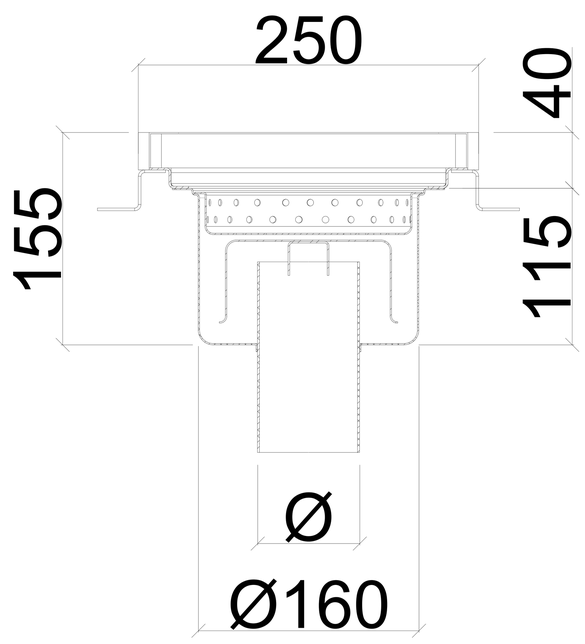


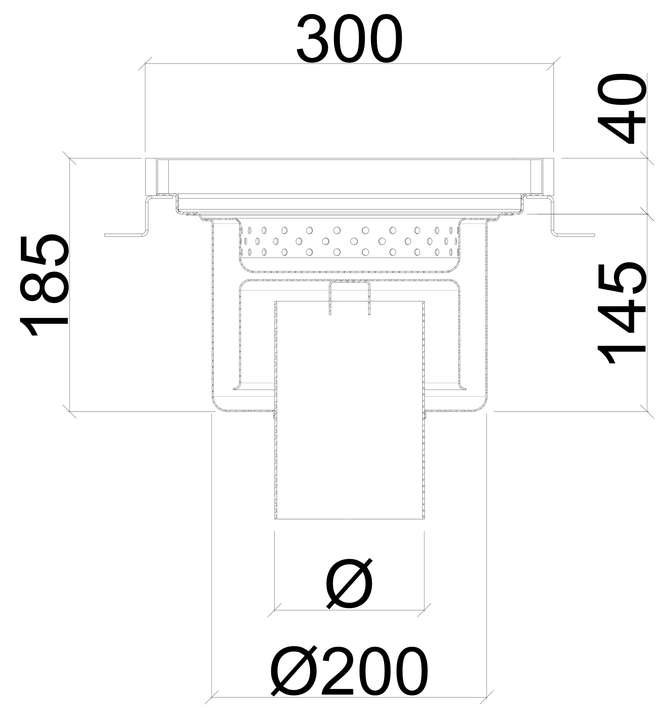


FENICROM®

## APPLICATION DRAWING

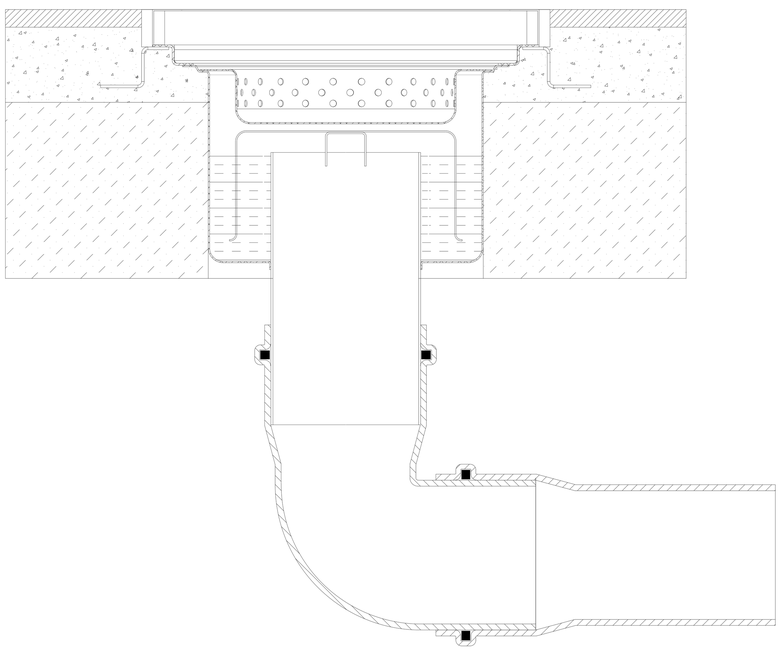
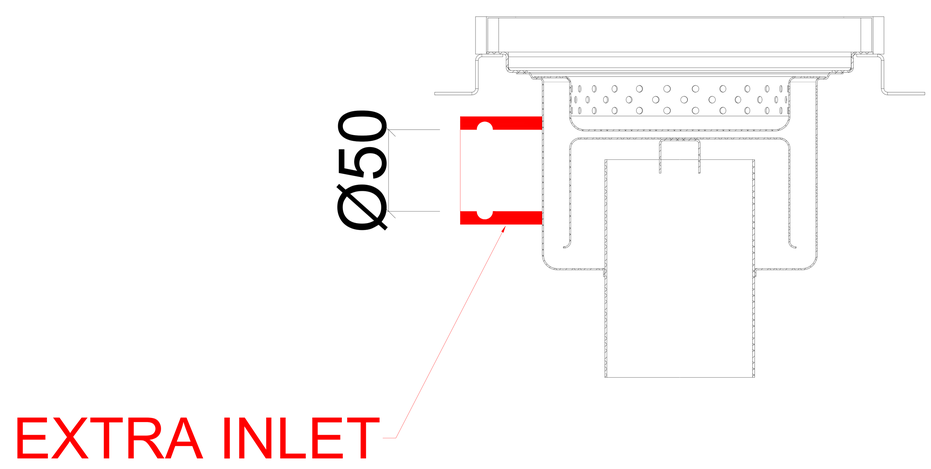
## OPTIONAL