LOW TYPE			
MODEL	W x L	Ø	
		DN50	DN70
LTAG-22	250 x 250	Ø50	Ø75
Max. Flow Rate lt / min		50	50
Waterseal Height		50mm	

LOW TYPE				
MODEL	W x L	Ø		
		DN50	DN70	DN100
LTAG-33	300 x 300	Ø50	Ø75	Ø110
Max. Flow Rate lt / min		50	50	70
Waterseal Height		50mm		

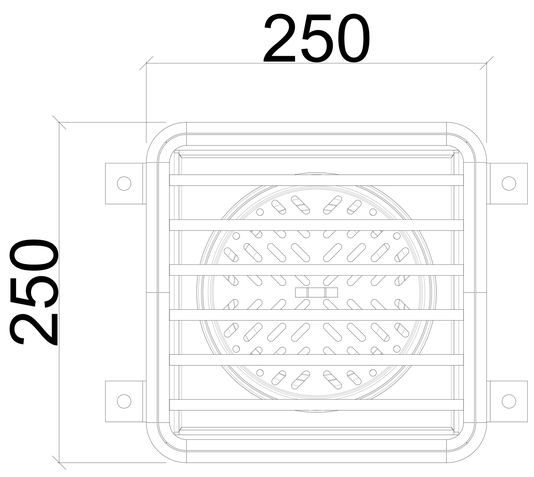

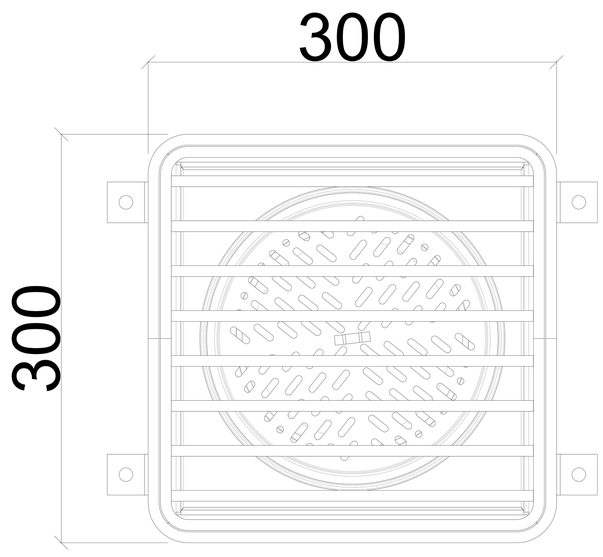

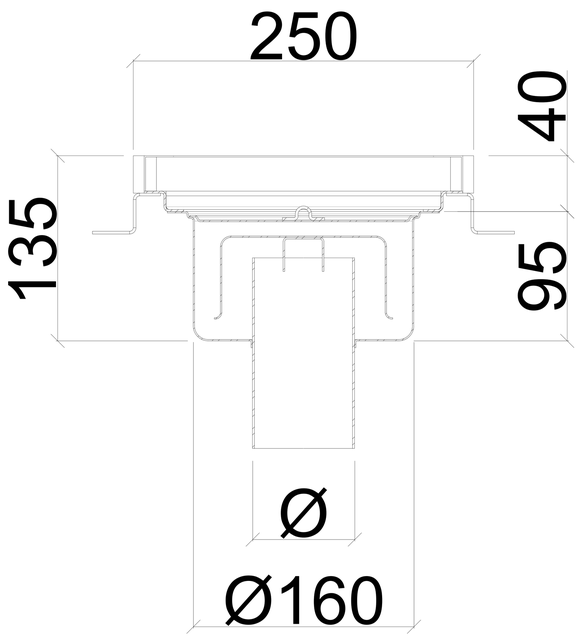

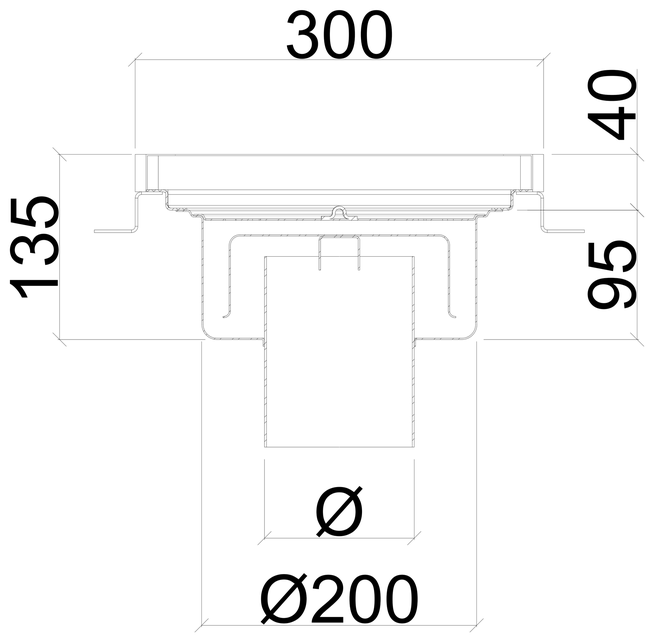

FENICROM®

APPLICATION DRAWING

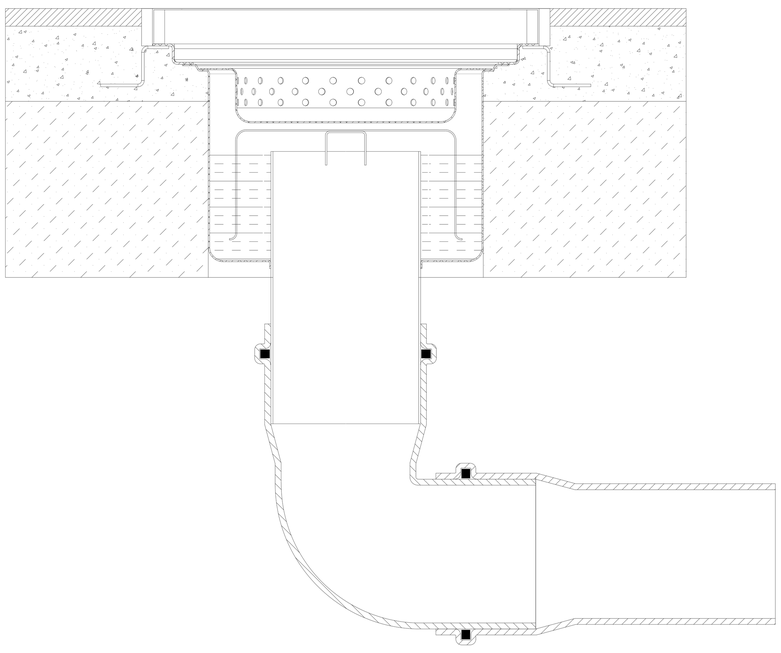
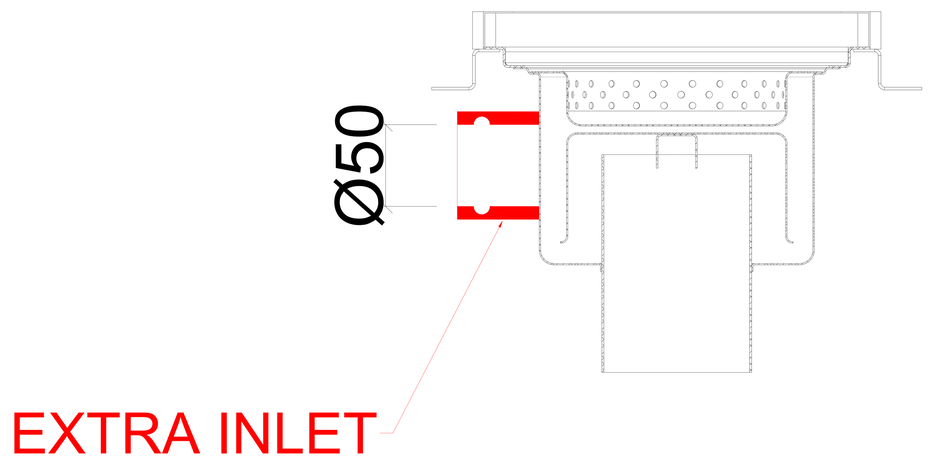
OPTIONAL