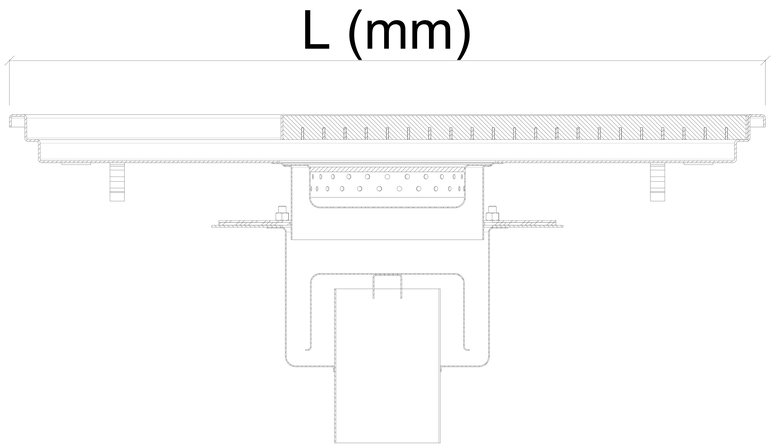

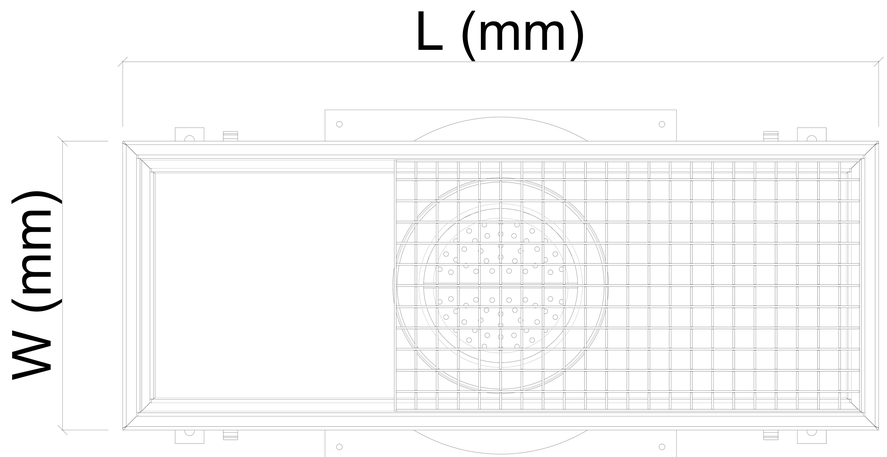

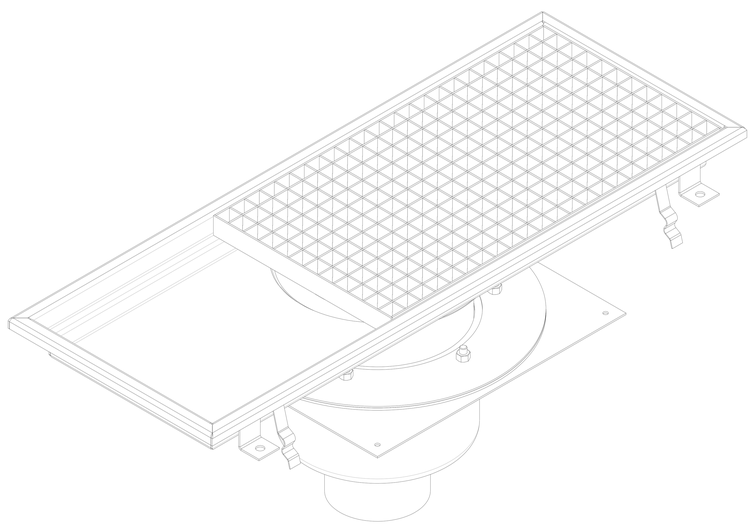

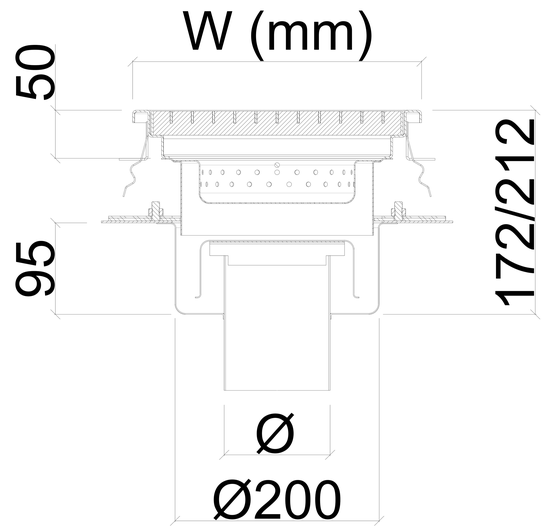

LOW TYPE

MODEL	W x L	Ø		
		DN50	DN70	DN100
TDAG-35	300 x 524	Ø50	Ø75	Ø110
TDAG-37	300 x 785			
TDAG-310	300 x 1009			
Max. Flow Rate	lt / min	50	50	70
Waterseal Height		50mm		

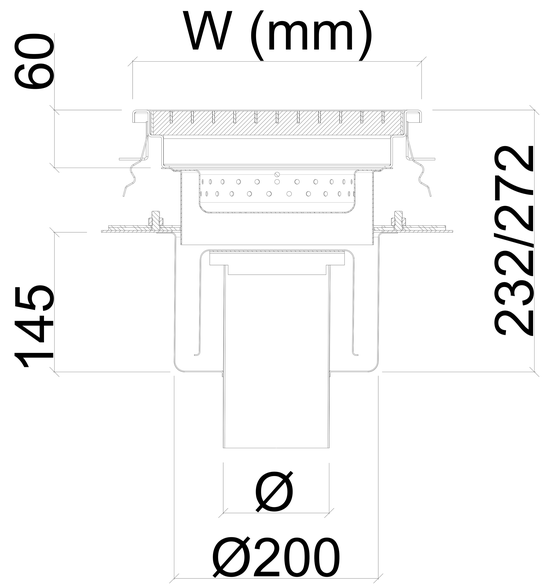

DEEP TYPE

MODEL	W x L	Ø		
		DN50	DN70	DN100
TDAG-35	300 x 524	Ø50	Ø75	Ø110
TDAG-37	300 x 785			
TDAG-310	300 x 1009			
Max. Flow Rate	lt / min	50	50	70
Waterseal Height		60mm		

APPLICATION DRAWING

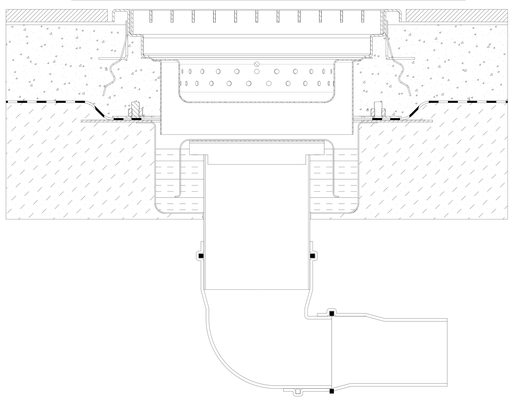

INFILL ELEMENT FOR REINFORCING THE FRAME

OPTIONAL

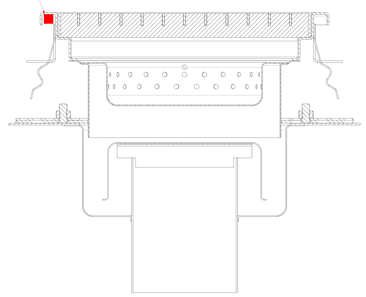

FENICROM®