CHANNEL TYPE: TMP-KA2G-8 BOTTOM OUTLET
TMP-KY2G-8 SIDE OUTLET

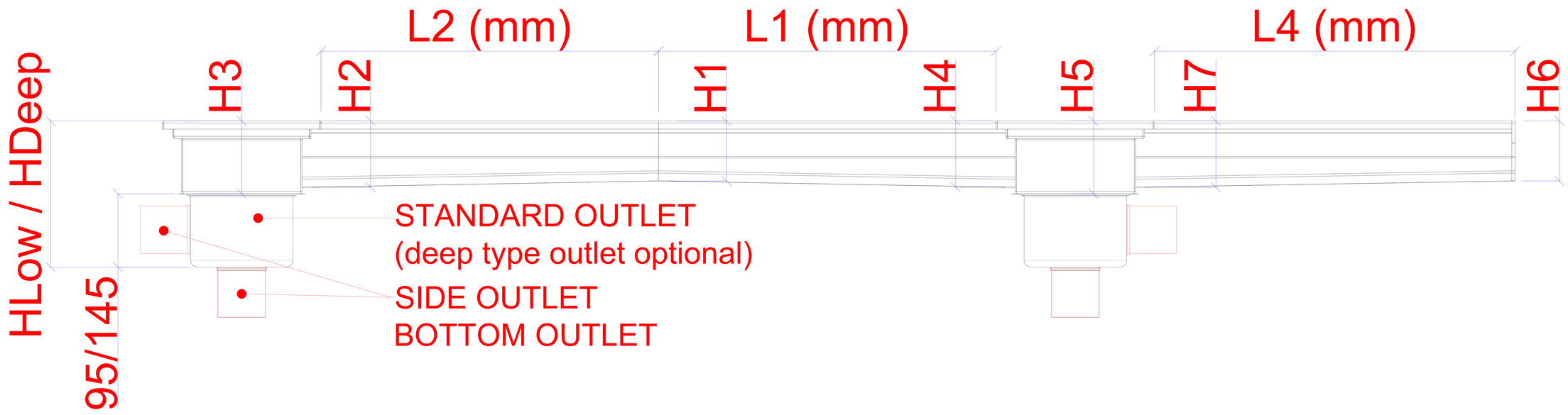

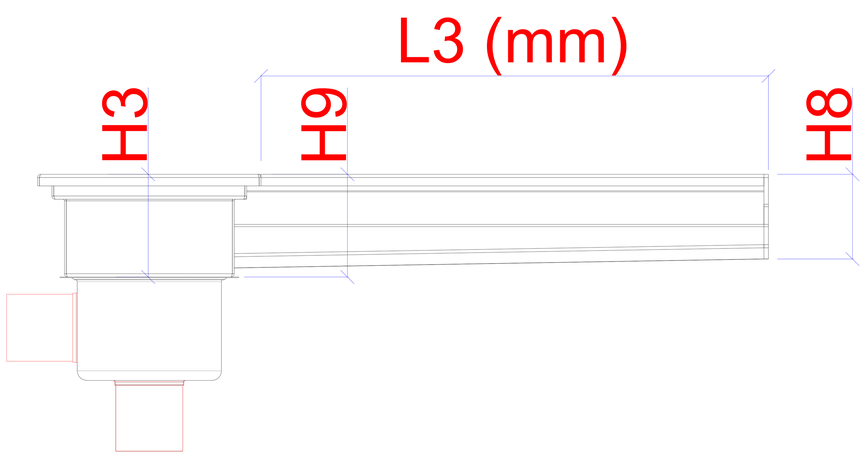

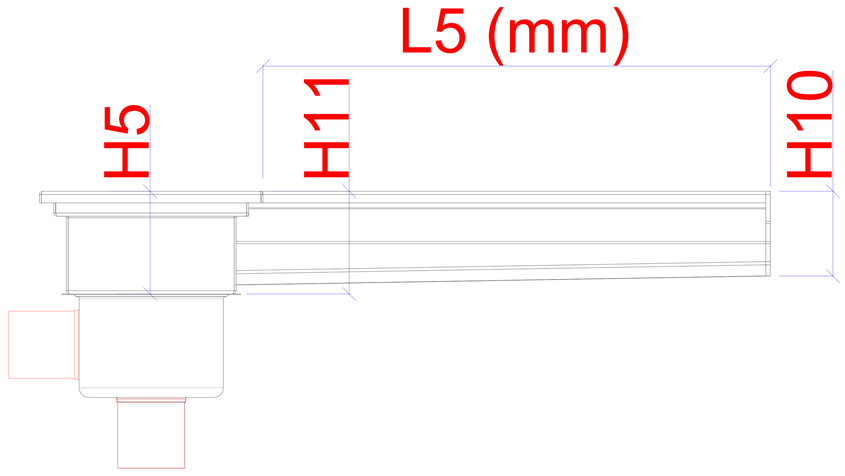

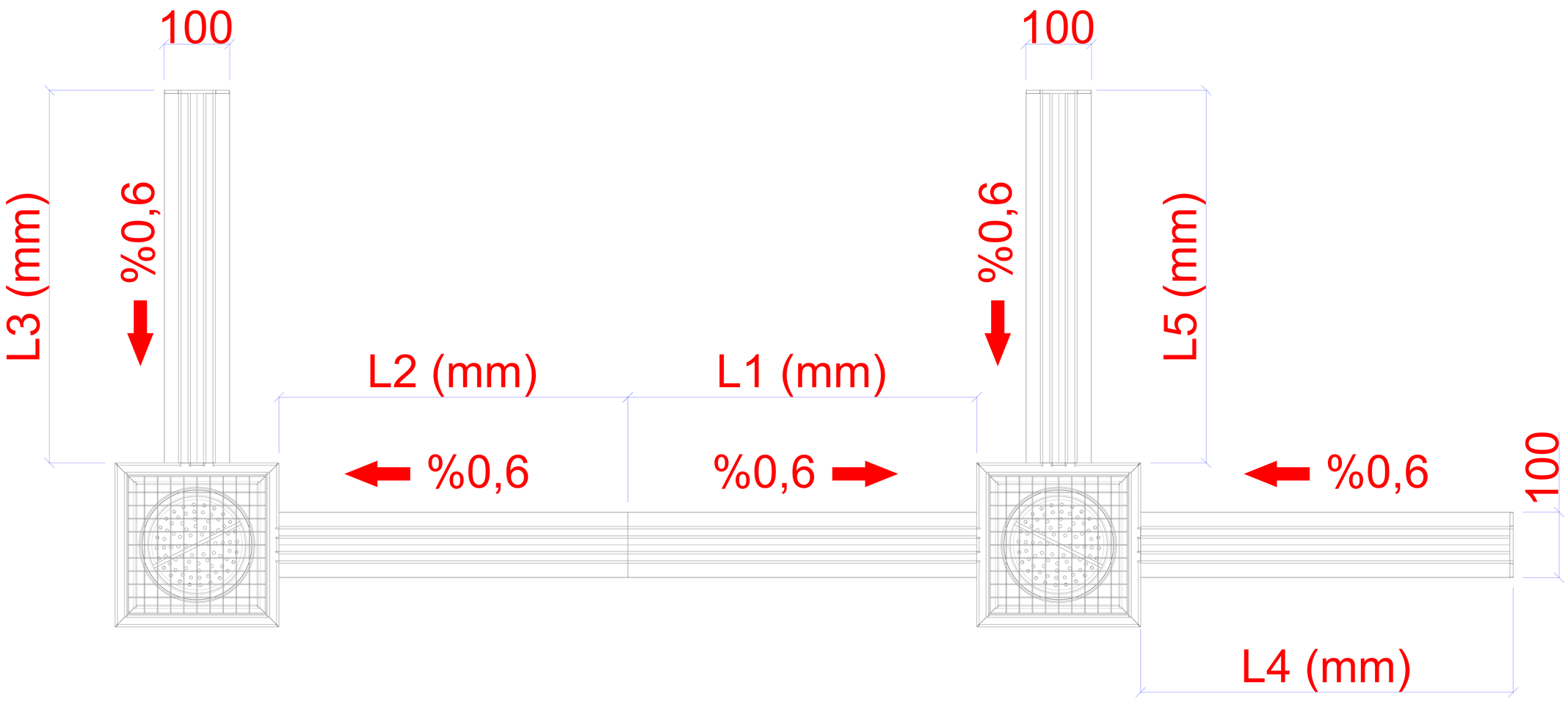

INFILL ELEMENT FOR
REINFORCING THE
FRAME
(OPTIONAL)

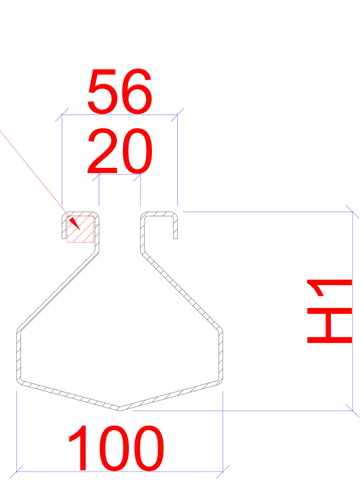

TMP
H1min:95mm

FENICROM®