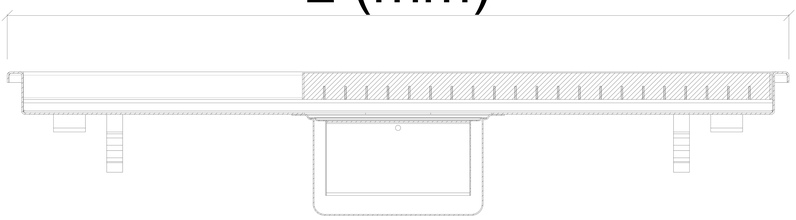

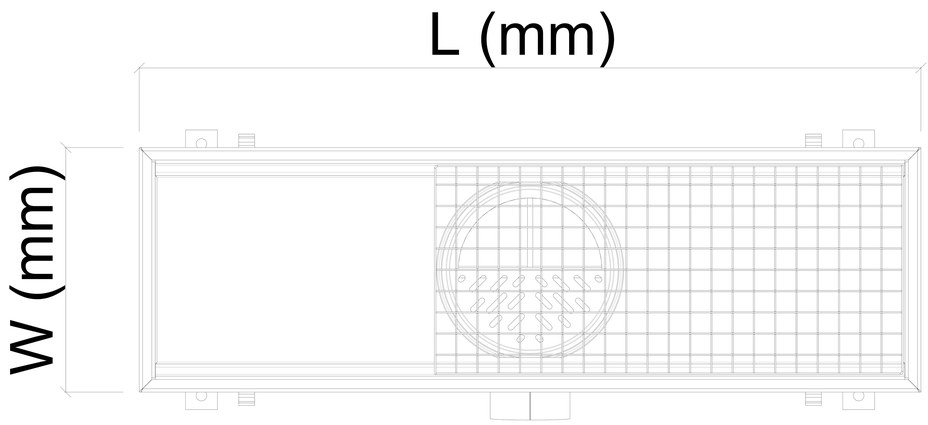

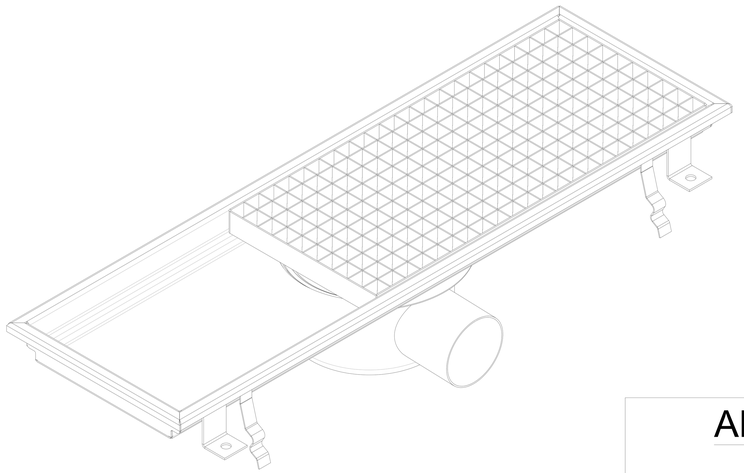

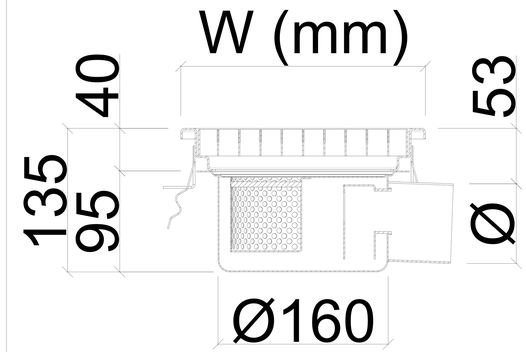

LOW TYPE			
MODEL	W x L	Ø	
		DN50	DN70
YG-23	230 x 294	Ø50	Ø75
YG-25	230 x 474		
YG-27	230 x 735		
YG-29	230 x 916		
Max. Flow Rate	lt / min	50	50
Waterseal Height		50mm	

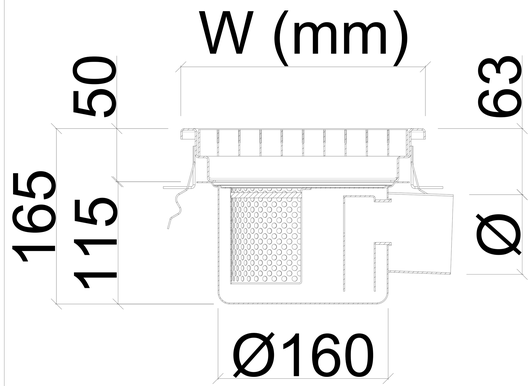

DEEP TYPE			
MODEL	W x L	Ø	
		DN50	DN70
YG-23-D	230 x 294	Ø50	Ø75
YG-25-D	230 x 474		
YG-27-D	230 x 735		
YG-29-D	230 x 916		
Max. Flow Rate	lt / min	50	50
Waterseal Height		50mm	

APPLICATION DRAWING

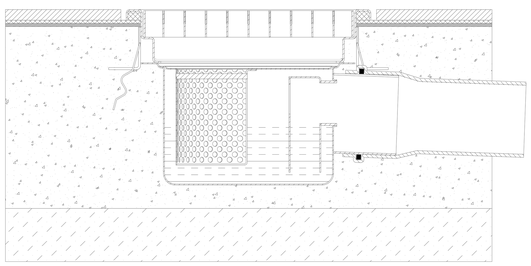

OPTIONAL

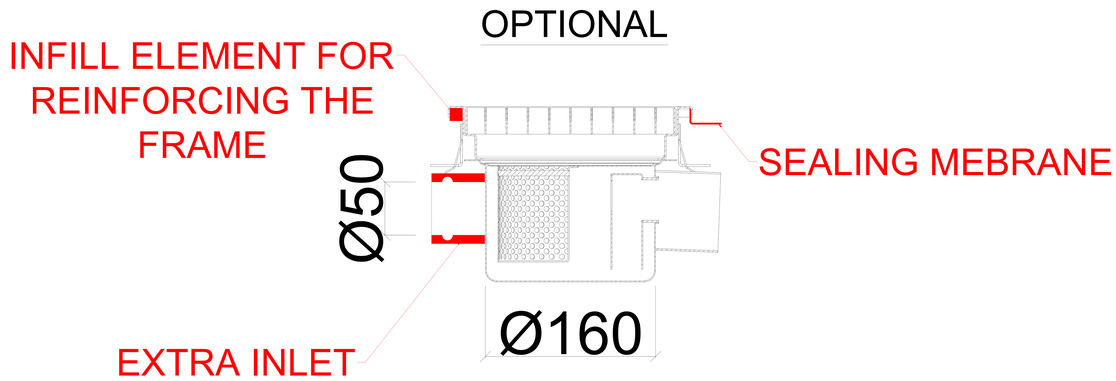

FENICROM®