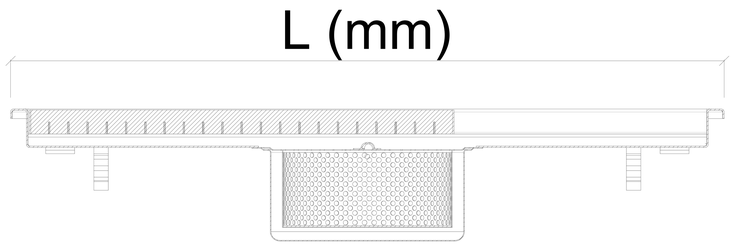

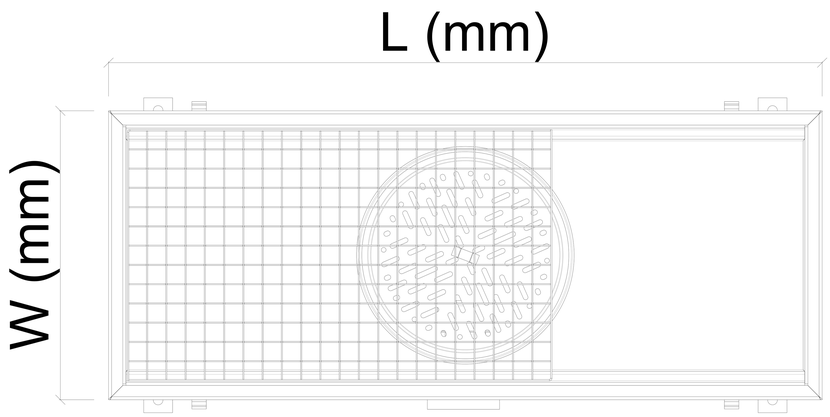

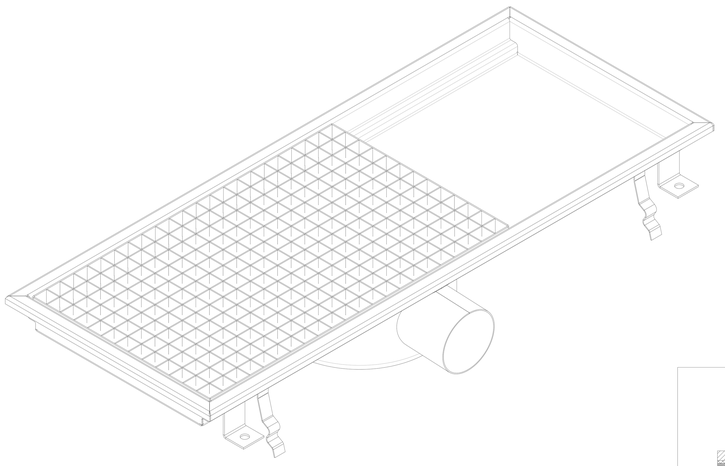

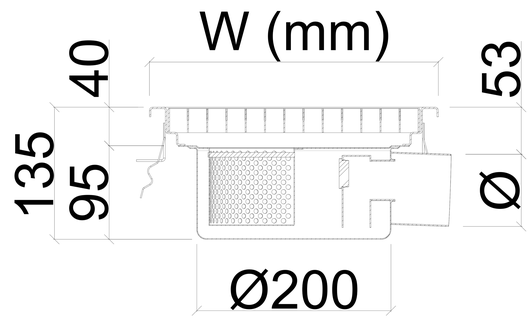

LOW TYPE			
MODEL	W x L	Ø	
		DN50	DN70
YG-35	300 x 480	Ø50	Ø75
YG-37	300 x 741		
YG-39	300 x 921		
Max. Flow Rate	lt / min	50	50
Waterseal Height		50mm	

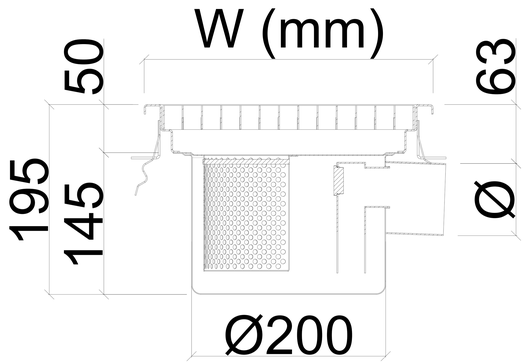

DEEP TYPE				
MODEL	W x L	Ø		
		DN50	DN70	DN100
YG-35-D	300 x 480	Ø50	Ø75	Ø110
YG-37-D	300 x 741			
YG-39-D	300 x 921			
Max. Flow Rate	lt / min	50	50	70
Waterseal Height		60mm		

APPLICATION DRAWING

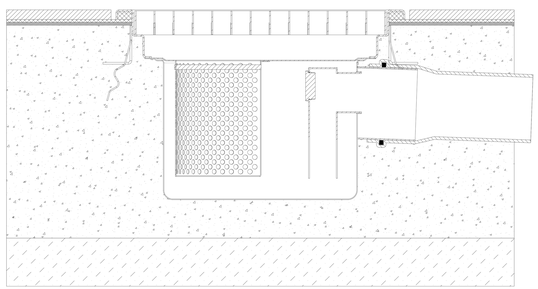

OPTIONAL

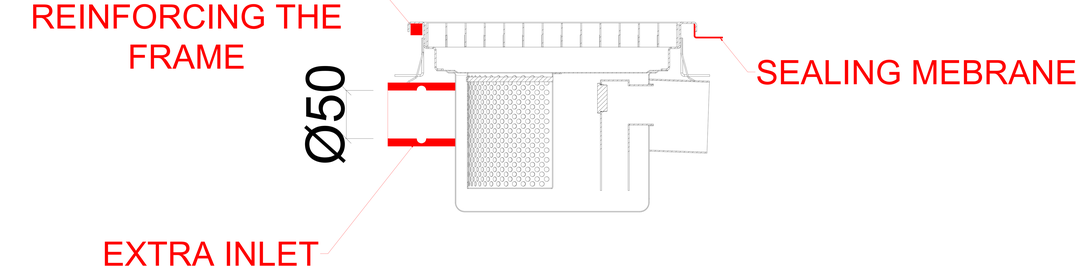

FENICROM®