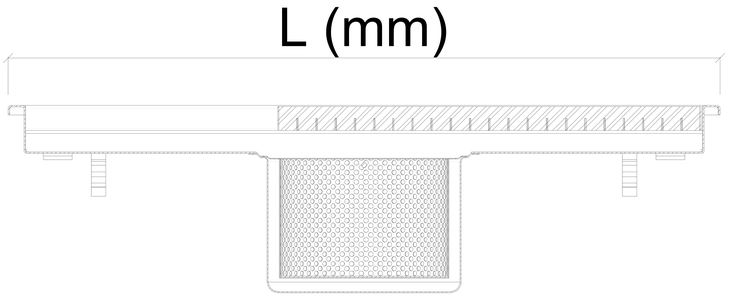

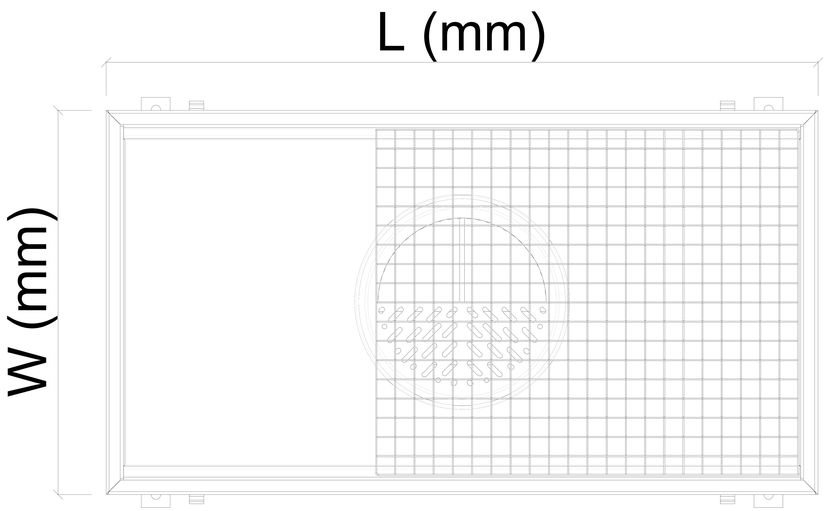

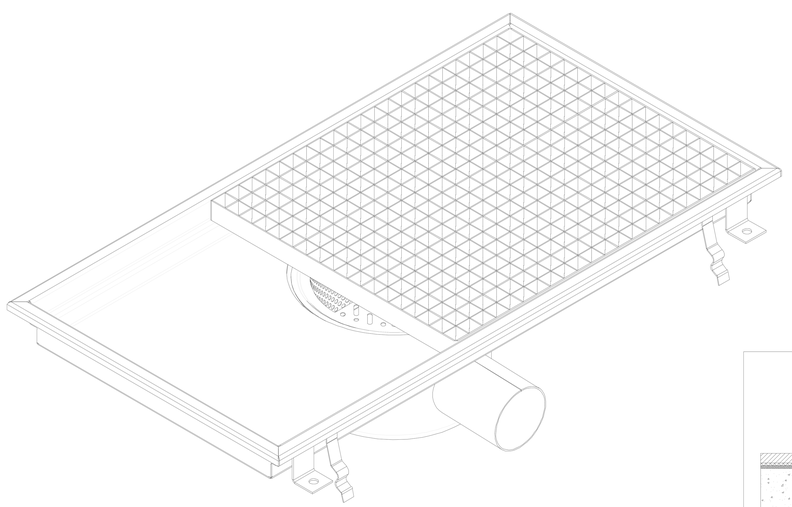

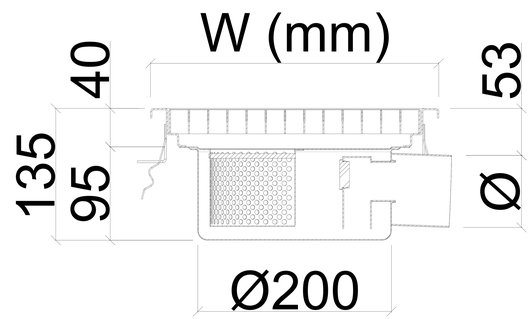

LOW TYPE			
MODEL	W x L	Ø	
		DN50	DN70
YG-45	400 x 480	Ø50	Ø75
YG-47	400 x 741		
YG-49	400 x 921		
Max. Flow Rate lt / min		50	50
Waterseal Height		50mm	

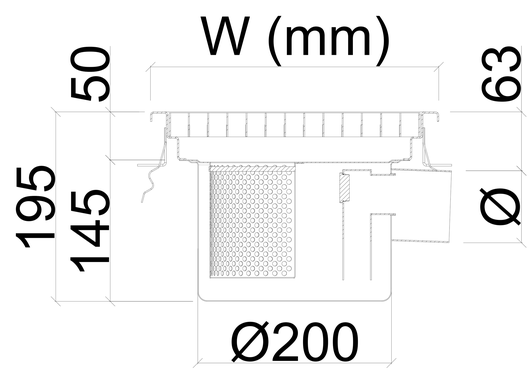

DEEP TYPE				
MODEL	W x L	Ø		
		DN50	DN70	DN100
YG-45-D	400 x 480	Ø50	Ø75	Ø110
YG-47-D	400 x 741			
YG-49-D	400 x 921			
Max. Flow Rate lt / min		50	50	70
Waterseal Height		60mm		

APPLICATION DRAWING

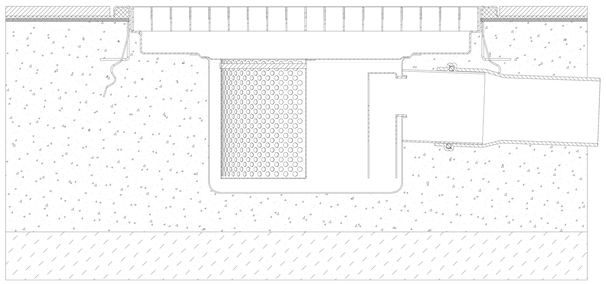

OPTIONAL

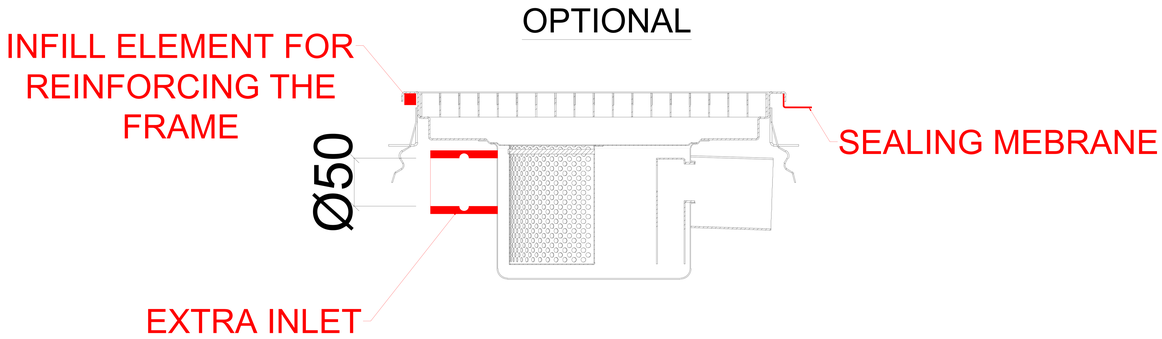

FENICROM®